PW-12P-MD

DIMENSIONAL SCHEMATIC AND PERFORMANCE

DIMENSIONS mm

not to scale
specifications are subject to change

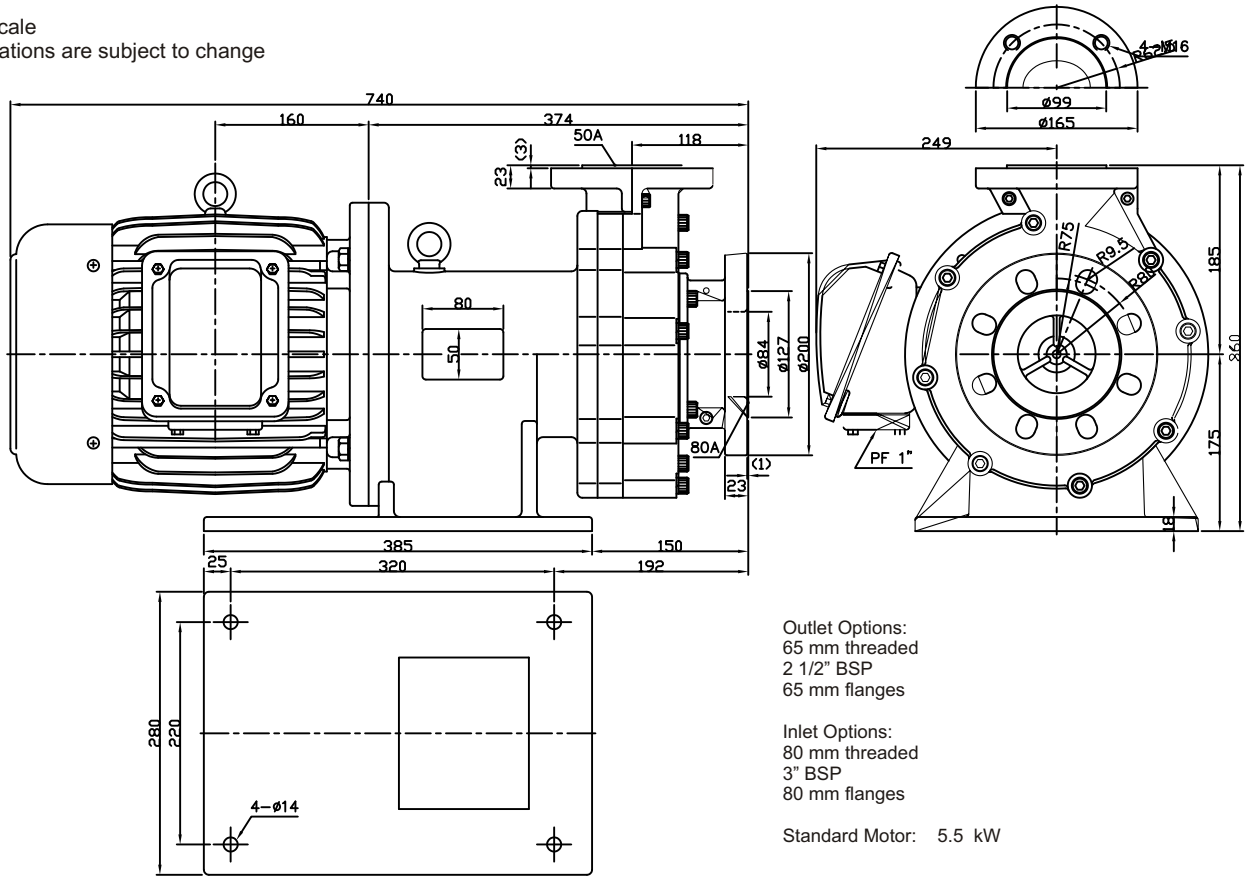

Outlet Options:
65 mm threaded
2 1/2" BSP
65 mm flanges

Inlet Options:
80 mm threaded
3" BSP
80 mm flanges

Standard Motor: 5.5 kW

Details may change depending upon the motor specificed

PERFORMANCE

Tests obtained
50 hz 2860 rpm
1.1 SG

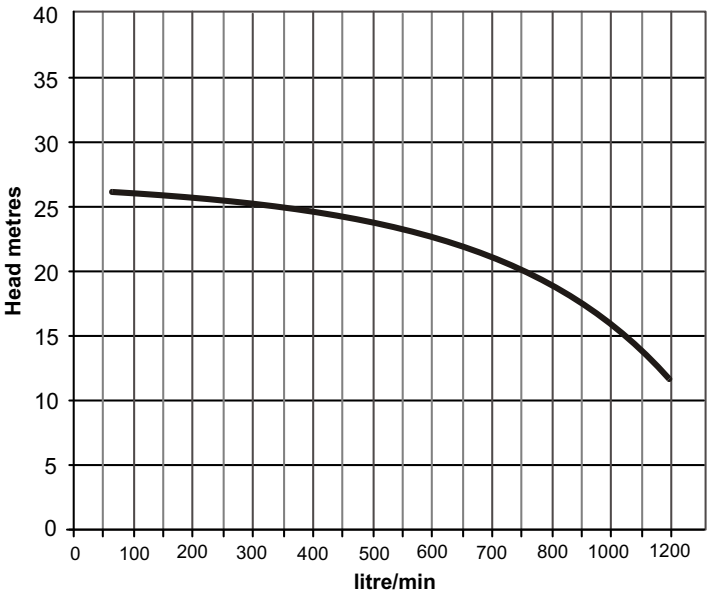

Performance may change depending upon the motor specificed

March May Ltd, Howard Road, Eaton Socon, St Neots PE19 8NZ, England
Tel: +44 (0) 1480 214444 Fax: +44 (0) 1480 405336 E-Mail: sales@marchmay.co.uk Website: www:marchmay.co.uk